Genesys Application Note

AudioCodes Mediant Gateway Family (1000, 2000, 3000) With Genesys SIP Server

Document version 1.1

The information contained herein is proprietary and confidential and cannot be disclosed or duplicated without the prior written consent of Genesys Telecommunications Laboratories, Inc.

Copyright © 2016 Genesys Telecommunications Laboratories, Inc. All rights reserved.

About Genesys

Genesys, with more than 4,000 customers in 80 countries, is the world's leading provider of customer service and contact center software. Drawing on its more than 20 years of customer service innovation and experience, Genesys is uniquely positioned to help companies bring their people, insights and customer channels together to effectively drive today's customer conversation. Genesys software directs more than 100 million interactions every day, maximizing the value of customer engagement and differentiating the experience by driving personalization and multichannel customer service, and extending customer service across the enterprise to optimize processes and the performance of customer-facing employees. Go to www.genesys.com for more information.

Each product has its own documentation for online viewing at the Genesys Documentation website or on the Documentation Library DVD, which is available from Genesys upon request. For more information, contact your sales representative.

Notice

Although reasonable effort is made to ensure that the information in this document is complete and accurate at the time of release, Genesys Telecommunications Laboratories, Inc. cannot assume responsibility for any existing errors. Changes and/or corrections to the information contained in this document may be incorporated in future versions.

Your Responsibility for Your System's Security

You are responsible for the security of your system. Product administration to prevent unauthorized use is your responsibility. Your system administrator should read all documents provided with this product to fully understand the features available that reduce your risk of incurring charges for unlicensed use of Genesys products.

Trademarks

Genesys and the Genesys logo are registered trademarks of Genesys Telecommunications Laboratories, Inc. All other company names and logos may be trademarks or registered trademarks of their respective holders.

Table of Contents

1 Summary 4
2 Feature Support.....5
3 Software and Hardware Versions Validated.....11
4 Features Configuration in Genesys Configuration Environment.....12
5 Gateway Configuration 15

1 Summary

AudioCodes Mediant Gateway (1000, 2000, and 3000) is recommended for integration with the Genesys SIP solution.

The following AudioCodes Mediant Gateway family versions were tested and supported:

- AudioCodes Mediant Gateway family (1000, 2000, 3000) v7.00A.040.004 (v7.0 and later).
- AudioCodes Mediant Gateway family (1000,2000, 3000) v6.40A and later.

The supporting versions of Genesys components include SIP Server v8.1.1, SIP Feature Server v8.1.2, Media Server (v8.1.x and v8.5.x), GVP (v8.1.x and v8.5.x) and SIP Proxy v8.1.1.

As noted in section 2, most test calls/cases were successfully executed.

2 Feature Support

2.1 Features Chart

Feature Name	
General Features Supported By Gateway	**Supported**
Inbound Calls - Standard	Yes
Inbound Calls - Contact Center/Routed	Yes
Outbound Calls - Standard	Yes
Outbound Calls - Automated Dialer Campaign, CPD by Genesys	Yes
Remote Agent, not REGISTERed to SIP Server	Yes
Call Qualification & Parking	Yes
GVP - Advanced IVR (VXML, TTS, ASR, etc), Conferencing, & more	Yes
Technical Features	**Supported**
"Single Site"	Yes
"Multisite"	Yes
SIP Business Continuity	Yes
Transfer with re-INVITE	Yes
Transfer with 3xx	Yes
Transfer with REFER	Yes
Ad Hoc Conference	Yes
SIP Authentication	N/T
SIP Over TLS	Yes
SRTP	Yes
Service Monitoring	Yes
SIP Server High Availability - with Virtual IP Address	Yes
SIP Trunk/SBC/Gateway High Availability - with Virtual IP Address	Yes
SIP Trunk/SBC/Gateway High Availability – List of IP Addresses	N/T
SIP Server High Availability - DNS-based Redundancy with SIP Proxy	N/T
SIP Trunk/SBC/Gateway High Availability - DNS-based Redundancy	N/T
Audio Codec Support	N/T
Video Support	N/T

2.2 Test Cases Chart

Functional Test Cases		
#	**Scenario Description**	**Supported**
1	Inbound Call to Agent released by caller	Yes
2	Inbound Call to Agent released by agent	Yes
3	Inbound Calls rejected	Yes
4	Inbound Call abandoned	Yes
5	Inbound Call to Route Point with Treatment	Yes
6	Interruptible Treatment	Yes
7	IVR (Collect Digit) Treatment	Yes
8	Inbound Call routed by using 302 out of SIP Server signaling path	Yes
9	1PCC Outbound Call from SIP Endpoint to external destination	Yes
10	3PCC Outbound Call to external destination	Yes
11	1PCC Outbound Call Abandoned	Yes
12	Caller is put on hold and retrieved by using RFC 2543 method	Yes
13	T-Lib-Initiated Hold/Retrieve Call with MOH using RFC 3264 method	Yes
14	3PCC 2 Step Transfer to internal destination by using re-INVITE method	Yes
15	3PCC Alternate from consult call to main call	Yes
16	1PCC Unattended (Blind) transfer using REFER	Yes
17	1PCC Attended Transfer to external destination	Yes
18	3PCC Two Step Conference to external party	Yes
19	3PCC (same as 1PCC) Single-Step Transfer to another agent	Yes
20	3PCC Single Step Transfer to external destination using REFER	Yes
21	3PCC Single Step Transfer to internal busy destination using REFER	Yes
22	Early Media for Inbound Call to Route Point with Treatment	Yes
23	Early Media for Inbound Call with Early Media for Routed to Agent	Yes
24	Inbound call routed outbound (Remote Agent) using INVITE without SDP	Yes
25	Call Progress Detection	Yes
26	Out of Service detection; checking MGW live status	Yes
27	SIP Authentication for outbound calls	N/T
28	SIP Authentication for incoming calls	N/T

2.3 General Features

SIP Trunk or Gateway - Feature Compatibility	Description	Supported	Test Cases
Inbound Calls - Standard	Direct calls to a phone/user with a DID #	Yes	1,2,3,4,12
Inbound Calls - Contact Center / Routed	Contact Center calls; may be queued or played some announcements before being routed to an agent	Yes	5,6,7,13,22,23
Outbound Calls - Standard	Manually Dialed, or Forwarded to external destination	Yes	9,10,11
Outbound Calls - Automated Dialer Campaign, CPD by Genesys	Automated dialing by Genesys OCS or similar application Call Progress Detection (CPD) by Genesys Media Server*	Yes	25
Remote Agent, not Registered to SIP Server	Typically using a PSTN phone behind the gateway or SIP Trunk	Yes	24
Call Qualification & Parking	Simple IVR controlled by a routing strategy, and queuing of calls with announcements or music	Yes	5,6,7,22,23
GVP – Advanced IVR (VXML, TTS, ASR, etc), Conferencing, & more	Same SIP signaling as qualification & parking	Yes	6,7
Call Recording	No meaningful impact to SIP signaling		No dedicated test cases

* CPD may also be performed by the gateway if it returns results in a format compatible with Genesys SIP. Please note such capabilities if they are available.

2.4 Technical Features

Technical Compatibility – Architecture & SIP Protocol	Description	Supported	Test Cases
"Single Site"	One instance of Genesys SIP Server	Yes	All test cases apply
"Multisite"	Two or more instances of Genesys SIP Server, behind a single Trunk and/or SBC		No "dedicated" test cases
SIP Business Continuity	The SIP Business Continuity Architecture across two active data centers	[not tested – requires supplemental testing]	Not covered by standard test plan
Transfer with re-INVITE	Transfer method reflects the signaling sent to the SIP Trunk or gateway	Yes	14,15
Transfer with 3xx	Redirect prior to call connection	Yes	8
Transfer with REFER	Transfer method reflects the signaling sent to the SIP Trunk or gateway	Yes	16,17,19,20,21
Ad Hoc Conference	Conference controlled on Genesys SIP Server & Media Server	Yes	18
SIP Authentication		Yes	27, 28
SIP Over TLS	See the Genesys 8.1 SIP Server Deployment Guide for details.	Yes	No dedicated test cases
SRTP		Yes	No dedicated test cases
Service Monitoring	Monitoring with OPTIONS messages	Yes	26
SIP Server High Availability - with Virtual IP Address	Effectively transparent to external devices	Yes	No dedicated test cases
SIP Trunk/SBC/Gateway High Availability - with Virtual IP Address	Effectively transparent to external devices	Yes	No dedicated test cases
SIP Trunk/SBC/Gateway High Availability – List of IP Addresses	Support for a highly available SBC or SIP Trunk with either multiple active nodes or primary/backup; SIP Server is configured with the IP address of each node (typically using the backup contact setting on SIP Server)	[not tested – requires supplemental testing]	Not covered by standard test plan
SIP Server High Availability - DNS-based Redundancy with SIP Proxy	Architectures with SIP Proxy used to manage high availability	[not tested – requires supplemental testing]	Not covered by standard test plan
SIP Trunk/SBC/Gateway High Availability - DNS-based Redundancy	Support for an SBC or SIP Trunk with DNS-based redundancy (the contact of the DN on SIP Server would be hostname/FQDN)	[not tested – requires supplemental testing]	Not covered by standard test plan
Audio Codec Support	The test plan does not include dedicated tests for each codec; codecs are supported by Media Server/GVP, and by the SIP endpoints	Yes	All test cases utilize the "negotiated preferred" codec
Video Support	The test plan does not include dedicated tests for video; video is supported by Media Server/GVP, and by the SIP endpoints	[not tested – requires supplemental testing]	No dedicated test cases

2.5 Details Regarding Features

2.5.1 Multisite

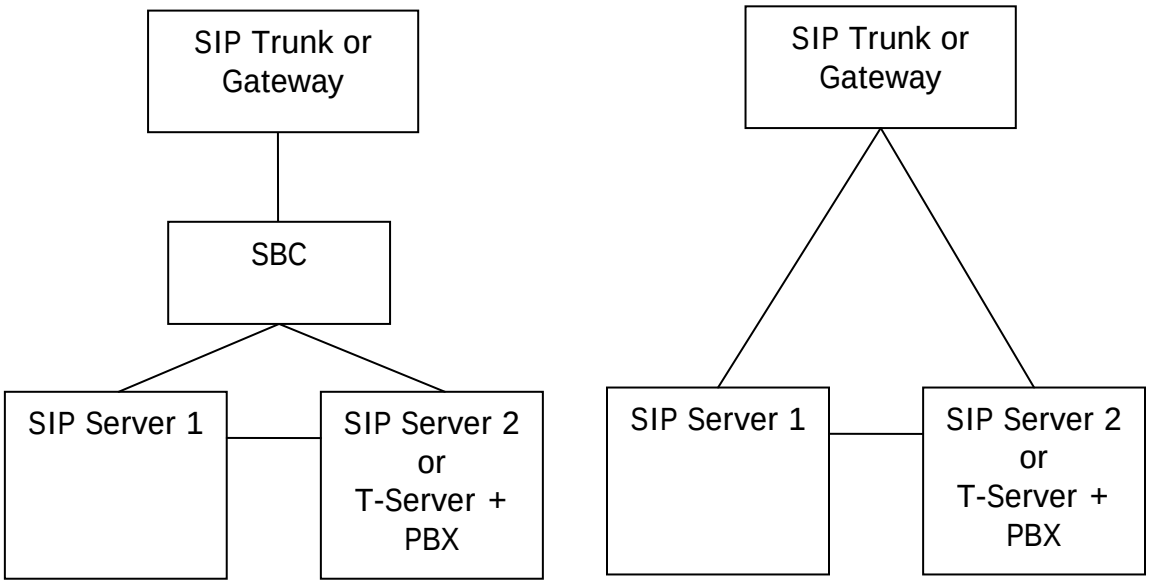

Note:
This application note uses the term "multisite" to cover architectures with transfers with ISCC, which conform to either option on the left: a SIP Trunk/Gateway through a single SBC, or a SIP Trunk/Gateway connected directly.

Either REFER or reINVITE may be tested and supported.

Architectures with 2 or more SBCs are beyond the scope of this app note.

2.5.2 High Availability

This Application Note and the Test Plan provide coverage and support for High Availability accomplished with a "Virtual IP Address." This is also referred to as "IP Address Takeover" or a "Floating IP Address."

The general approach is that the "active" instance of a component utilizes this special IP address. It is typically transparent at the SIP signaling layer which instance is active. A Genesys SIP Server, a Gateway, or the components may employ this high availability on the interface for a standard "SIP Trunk."

Other methods of high availability do exist. These methods require more advanced logic on the part of each SIP component to monitor multiple instances of another component, and select the appropriate instance.

For example, SIP Server supports configuring a primary and back IP address for a component (using the contact and contacts-backup options). This type of method is referred to as a “list of IP Addresses” in this application note. In another example, a SIP Server does support using an FQDN to reach another component, and can utilize multiple DNS records to help choose the best component instance. This method is referred to as “DNS-based HA.”

Both the “List of IP Addresses” and DNS-based high availability methods are beyond the scope of this Application Note (and this limitation applies in both directions, from SIP Server towards an external component, and vice versa from an external component towards SIP Server).

3 Software and Hardware Versions Validated

The following Genesys components and AudioCodes Mediant Gateway were validated for reference configuration examples.

3.1 Genesys Components

Genesys Components		
Component	**Version**	**Notes**
SIP Server	8.1.1	Genesys SIP Server performs call switching and control. SIP Server communicates via SIP with SIP Endpoints.
Genesys Media Server	8.5.x	Used to handle media interactions such as call treatments (ring back, busy tones and music on hold); also used as MCU.
Genesys SIP Feature Server	8.1.2	Used as a SIP Voicemail Server
SIP Proxy	8.1.1	Optionally can be used for DNS-based HA deployment

3.2 Gateway

3rd Party Hardware Components		
Model	**Version**	**Notes**
AudioCodes Mediant Gateway 1000B	7.0	7.00A.040.004

For a full listing of 3rd party hardware/software supported by Genesys, see the Genesys Supported Media Interface (SMI) Guide.

4 Features Configuration in Genesys Configuration Environment

Genesys SIP Configuration	
Features Supported By Gateway	
Feature	**Key Actions and Procedures**
Inbound Calls – Standard Test cases: 1, 2, 3, 4, 5, 6, 7, 12, 13, 22, 23	1. In the Genesys configuration environment, under Switch -> DNs, create a DN object of type Trunk. This object represents the SIP Trunk pointing to the AudioCodes Gateway. 2. In the Trunk DN -> TServer section, configure: **contact=<the contact URI that SIP Server uses for communication with the GW>** 3. If needed, enable support of Early media for inbound calls. In the Trunk DN -> TServer section, configure: **sip-early-dialog-mode=1** 4. If needed, specify the method of hold media SDP (RFC 3264 "inactive" SDP) to be used by SIP Server for third-party call control (3pcc) hold operations. In the SIP Server Application -> TServer section, configure: **sip-hold-rfc3264=true** **Note:** By default, SIP Server uses "black hole" RFC 2543 method (c=0.0.0.0).
Inbound Calls - Contact Center/Routed	Same configuration as for Inbound Calls - Standard, above.
Outbound Calls - Standard Test cases: 9, 10, 11	1. In the Genesys configuration environment, under Switch -> DNs, create a DN object of type Trunk. This object represents the SIP Trunk pointing to the AudioCodes Gateway. 2. In the Trunk DN -> TServer section, configure: **contact =<the contact URI that SIP Server uses for communication with the GW>** 3. To activate required features described in this Table, configure options in the Trunk DN object as described in Inbound Calls - Standard, above. 4. Configure AudioCodes to support inbound/outbound calls to/from SIP Server. 5. Configure a phone to make basic calls (incoming, outgoing) with SIP Server. 6. If needed, specify the REFER method that SIP Server will use to make 3pcc outbound calls. In the DN object of type Extension -> TServer section, configure: **refer-enabled=true** 7. Start SIP Server. 8. After successful SIP registration, the phone is ready for making outgoing calls and receiving incoming calls. 9. Run your desktop client to make a test call.

Outbound Calls - Automated Dialer Campaign, CPD by Genesys Test case: 25	1. Enable call progress detection to be done by the AudioCodes Gateway. In the Trunk DN (representing the GW) -> TServer section, configure: **cpd-capability=audiocodes** 2. Specify the re-INVITE method to be used for 3pcc operations (outgoing calls, consultation calls, transfer completion). In the Trunk DN (representing the Gateway) -> TServer section, configure: **refer-enabled=false**
Remote Agent, not REGISTERed to SIP Server Test cases: 24	No configuration is required
Call Qualification & Parking Test cases: 5, 6, 7, 22, 23	No configuration is required
GVP – Advanced IVR (VXML, TTS, ASR, etc), Conferencing, & more	Deploy Genesys Media Server with required capabilities. See the SIP Server Deployment Guide for details.
Technical Features	**Key Actions and Procedures**
"Single Site"	Deploy one instance of SIP Server. See "Inbound Calls" and "Outbound Calls" features, above.
"Multisite"	Deploy two or more instances of Genesys SIP Server behind a single Trunk and/or GW. See Multisite and the SIP Server Deployment Guide for details.
SIP Business Continuity	Refer to the Genesys SIP Server High-Availability Deployment Guide.
Transfer with re-INVITE Test cases: 14, 15	Specify the re-INVITE method to be used for 3pcc Attended transfer. In the DN type Extension (transfer controller) -> TServer section, configure: **refer-enabled=false**
Transfer with 3xx Test case: 8	Force SIP Server to put itself in the Out Of Signaling Path (OOSP) after the Unattended transfer (Genesys Single-Step Transfer) or routing to the external destination has been completed. In the Trunk DN object (representing the AudioCodes Gateway) -> TServer section, configure: **oosp-transfer-enabled=true**

Transfer with REFER Test cases: 16, 17, 19, 20, 21	Specify the REFER method to be used for 3pcc transfer operations. In the Trunk DN object (representing the AudioCodes Gateway) -> TServer section, configure: **refer-enabled=true**
Ad Hoc Conference Test case: 18	Deploy Genesys Media Server with MCU capabilities. See the SIP Server Deployment Guide for details.
SIP Over TLS	Please refer to the SIP Server Deployment Guide.
SRTP	No configuration is required.
Service Monitoring Test case: 26	Specify how often (in seconds) SIP Server should check a device for out-of-service status. In the Trunk DN object (representing the AudioCodes Gateway) - > TServer section, configure: **oos-check=10** Specify when SIP Server should place a non-responding device into out-of-service status. In the Trunk DN object (representing the AudioCodes Gateway) - > TServer section, configure: **oos-force=5**
SIP Server High Availability - with Virtual IP Address	Refer to the Genesys SIP Server High-Availability Deployment Guide.
SIP Server High Availability - DNS-based Redundancy with SIP Proxy	Requires HA deployment using SIP Proxy. SIP Proxy can be used in the SIP Server standalone deployment or Genesys Business Continuity with SIP Proxy deployment. Refer to the Genesys SIP Proxy Deployment Guide and Genesys SIP Server High-Availability Deployment Guide.
Audio Codec Support	No configuration is required.

5 Gateway Configuration

1. Log in to the AudioCodes web administrative interface.

2. From Configuration on the main menu, navigate to VoIP > Gateway > Routing > **Tel to IP Routing**.

3. Select **Add**, and then click **Classic View** (or plan to step through the tabbed view).

4. In the **Destination Phone Prefix** text box, enter the DNs that you will be routing through the AudioCodes. You will need to be familiar with AudioCodes routing parameters.

5. In the **Destination IP Address** text box, enter the SIP Server IP address.

6. In the **Destination Port** text box, enter the SIP Server port.
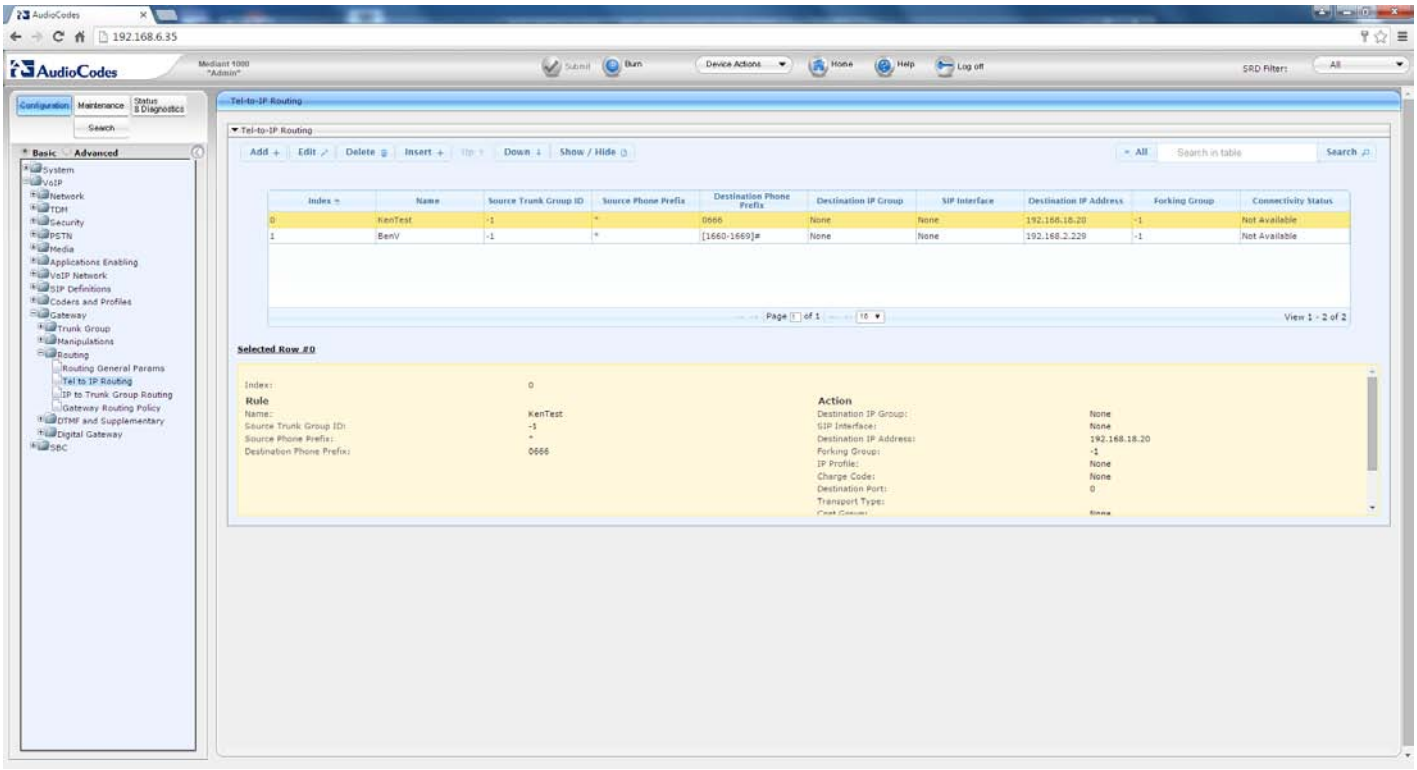
7. Select **Add** to include this new routing.